PRACTICAL-9

MULTIPLEXER :-

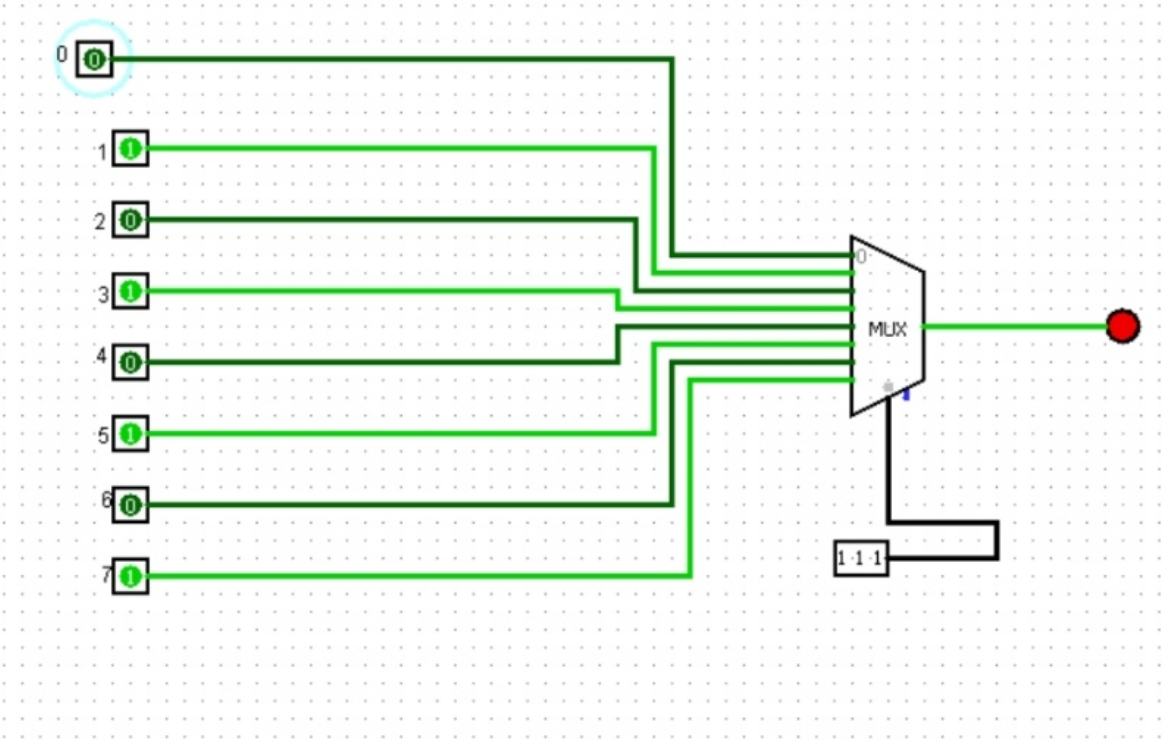

Selection input			**output**
S2	S1	S0	**Y**
0	0	0	I0
0	0	1	I1
0	1	0	I2
0	1	1	I3
1	0	0	I4
1	0	1	I5
1	1	0	I6
1	1	1	I7

DE-MULTIPLEXER :-

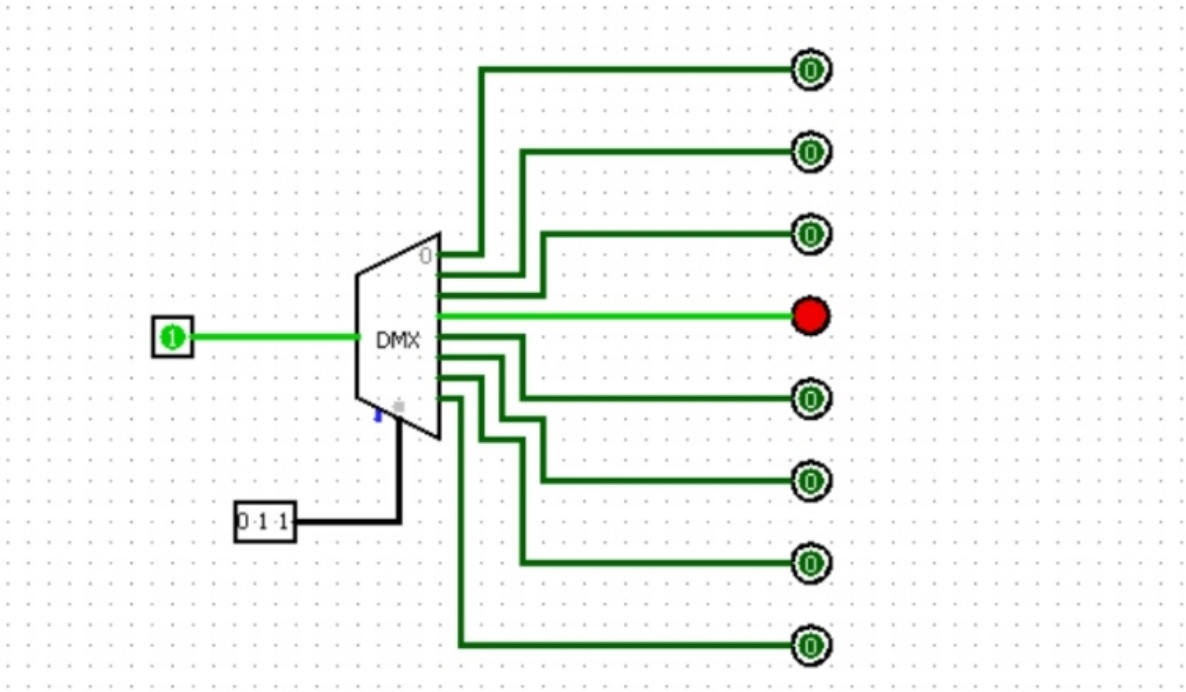

INPUTS	Y0	Y1	Y2	Y3	Y4	Y5	Y6	Y7
000	1	0	0	0	0	0	0	0
001	0	1	0	0	0	0	0	0
010	0	0	1	0	0	0	0	0
011	0	0	0	1	0	0	0	0
100	0	0	0	0	1	0	0	0
101	0	0	0	0	0	1	0	0
110	0	0	0	0	0	0	1	0
111	0	0	0	0	0	0	0	1